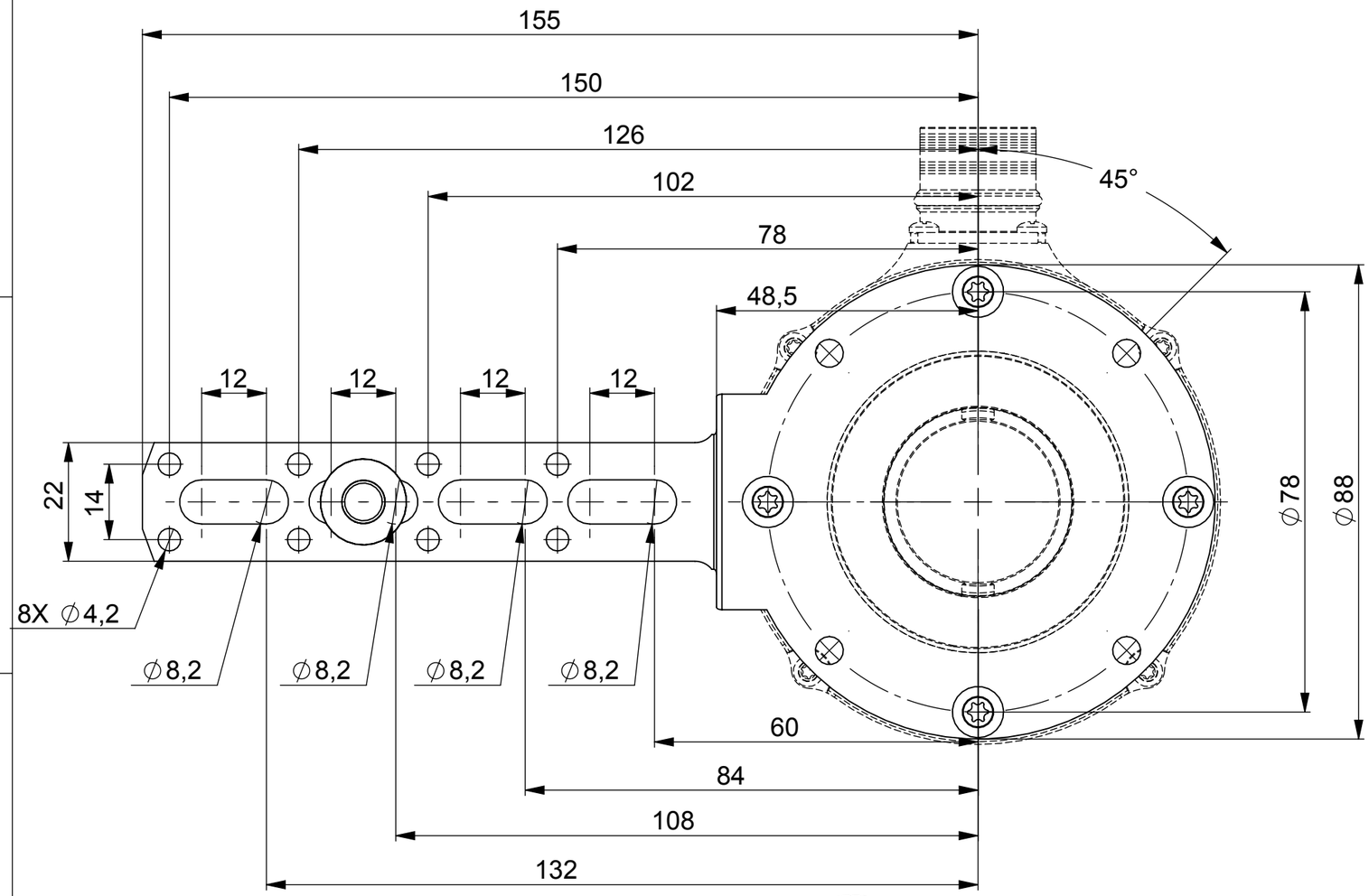

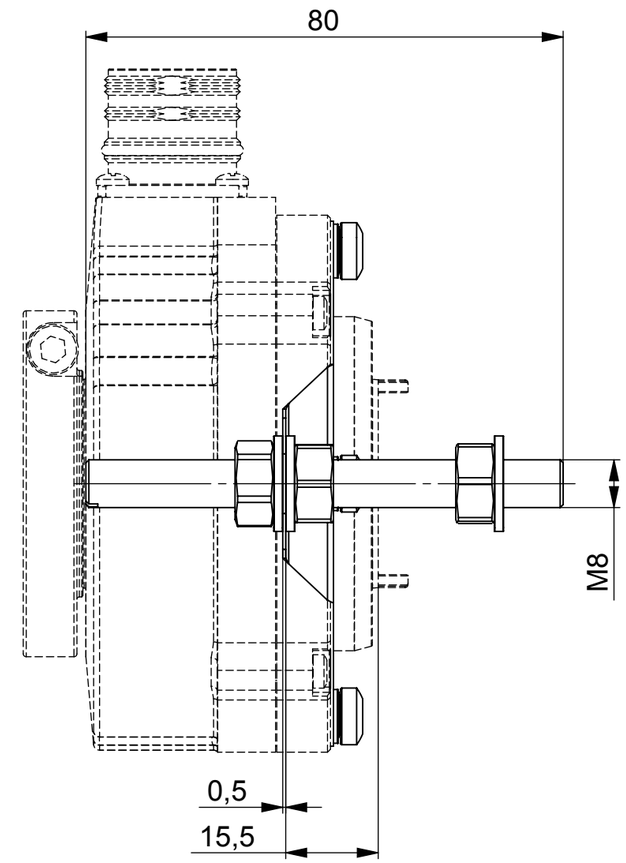

Functional Safety Product -TÜV certified -

Toute modification est soumise à l'approbation du FSM

All modifications must be approv ed by the Functional Safety Manager (FSM)

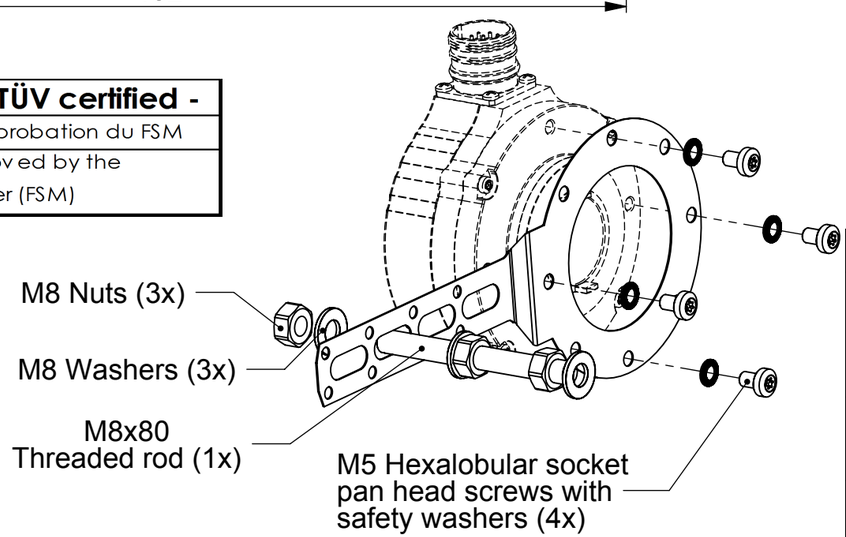

Ordering reference: **M9445/046**

UNCONTROLLED COPY

FIRST ISSUE DATE : 28/03/2018 DRAWN : RHM APPROVED : JHH DATE : 28/03/2018	SENSATA TECHNOLOGIES PROPRIETARY AND CONFIDENTIAL. NEITHER THIS PRINT NOR THE INFORMATION CONTAINED HEREON IS TO BE USED AGAINST THE INTERESTS OF SENSATA TECHNOLOGIES OR AGAINST THE INTERESTS OF ANY OF ITS AFFILIATED COMPANIES OR WHOLLY OWNED SUBSIDIARIES.
ECN : . DATE :	UNLESS OTHERWISE SPECIFIED DIMENSIONS ARE IN MILLIMETERS [INCHES] AND ARE INTENDED AS NOMINAL. SEE PRODUCT SPECIFICATION FOR MORE DETAILS.
Housing material : Flange material : Tether material : Stainless Steel	DO NOT SCALE DRAWING — EUROPEAN SYSTEM

Sensata Technologies
BEI Sensors

BEI SENSORS SAS
Espace Européen de l'Entreprise
9, rue de Copenhague
BP 70044 - F 67013 STRASBOURG Cedex
Tel : +33 (0)3 88 20 81 40

TITLE: DSU9 Tether arm kit

SIZE	DWG NO.	REV.
A3	M004	A

SCALE 1/1 | SOLIDWORKS | SHEET 1 OF 1

DEVICE:

PROJECT: